Multi-functional linear actuators for 2-way and 3-way globe valves

- **Actuating force 2500 N**
- **Nominal voltage AC/DC 24 V**
- **Control: modulating DC 0 ... 10 V**
- **Position feedback DC 2 ... 10 V**
- **Running time 60 s**
- **including bracket and stem coupler for BELIMO valves**

Overview of types

Type	Description
AVY24-MFT	Standard actuator
AVY24-MFT-C105	Actuator with auxiliary switch

Technical data

Electrical data	Nominal voltage	AC 24 V, 50/60 Hz / DC 24 V
	Nominal voltage range	AC 19.2 ... 28.8 V / DC 21.6 ... 28.8 V
	Power consumption In operation	6 W @ nominal force
	For wire sizing	12 VA
	Connection	Cable 1 m, 5 x 0.75 mm^2
	Parallel connection	Yes (note performance data for supply!)
Functional data	Actuating force Closing force	2500 N
	Inhibiting force	1700 N
	Control Control signal Y	DC 0 ... 10 V, input impedance 100 kΩ
	Operating range	DC 2 ... 10 V
	Position feedback (Measuring voltage)	DC 2 ... 10 V, max. 0.5 mA
	Position accuracy	±5%
	Manual override	With hexagonal key, temporary
	Nominal stroke	40 mm
	Running time	60 s
	Sound power level	Max. 45 dB (A)
	Position indication	mechanical 8 … 50 mm stroke
Safety	Protection class	**III** Safety extra-low voltage
	Degree of protection	IP54
	EMC	CE according to 2004/108/EC
	Mode of operation	Type 1 (EN 60730-1)
	Rated impulse voltage	0.33 kV (EN 60730-1)
	Control pollution degree	3 (EN 60730-1)
	Ambient temperature	0 ... +50°C
	Non-operating temperature	–40 ... +80°C
	Ambient humidity	95% r.H., non-condensating (EN 60730-1)
	Maintenance	Maintenance-free
Dimensions / Weight	Dimensions	See «Dimensions» on page 5
	Weight	Approx. 2.9 kg

Safety notes

- **The actuator has been designed for use in stationary heating, ventilation and air conditioning systems and is not allowed to be used outside the specified field of application, especially in aircraft or in any other airborne means of transport.**
- **It may only be installed by suitably trained personnel. Any legal regulations or regulations issued by authorities must be observed during assembly.**
- **The device does not contain any parts that can be replaced or repaired by the user.**
- **The device contains electrical and electronic components and is not allowed to be disposed of as household refuse. All locally valid regulations and requirements must be observed.**

Product features

Mode of operation
The actuator is activated with a standard modulating signal DC 0 ... 10 V.

Simple attachment
A clamping strap on the bracket makes possible simple attachment on the neck of the valve. The actuator spindle is coupled to the valve stem with the valve stem coupling. The actuator can be rotated through 360° ◁ on the neck of the valve.

Manual override
The stroke can be adjusted in a voltage-free state by using a hexagonal key (5 mm), which is plugged into the actuator at the top. If the hexagonal key is turned in a clockwise direction, then the actuator spindle will extend from the actuator housing (pushing) and maintain the position until a nominal voltage is applied (the controller has first priority).

High functional reliability
The actuator is protected against short circuits, polarity reversal and overloading.
The stroke is adapted automatically.

Function indication
The stroke is indicated mechanically on the bracket. The indicator adjusts itself automatically.
A two-coloured LED status display is located below the cover of the housing.

Combination valve/actuator
Refer to the valve documentation for suitable BELIMO valves, their permitted media temperatures and closing pressures. The retrofit actuator **AV..-R** is provided for third-party valves.

Auxiliary switch
The **AVY24-MFT-C105** actuator is equipped with an auxiliary switch for interrupting the supply voltage.

Electrical installation

Wiring diagram

Note
- Connect via safety isolation transformer.
- Other actuators can be connected in parallel. Note performance data for supply.

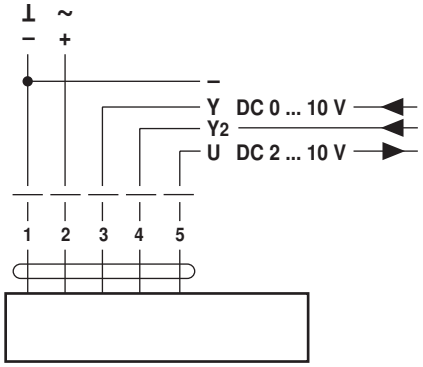

Cable colours:
1 = black
2 = red
3 = white
4 = white
5 = white

Functions

Alignment of the operating elements

The terminals for the cable connection, the operating elements S1, S2, S3 and the H1 LED indicator are located under the cover of the actuator.
By setting slide switch S3 or pressing pushbuttons S1 and S2, it is possible to configure the actuator very simply on site to suit actual requirements, if changes are necessary from the factory settings.
S3.1 Direction of stroke
S3.2 Valve closing point

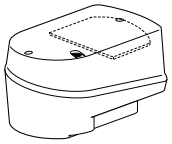

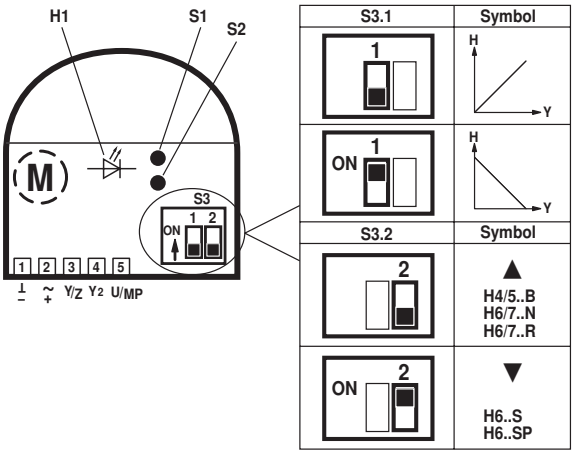

Functional description

Function	Description	Switch	Symbol	Consequence
Test	The valve effects full stroke with maximum running time and checks the adapted stroke to determine whether the two end-points (H=0% and H=100%) are reached.	Press S1		
Init (Adaptation)	The possible stroke effected (between the two mechanical end stops of the valve) is detected a 100% stroke and stored in the microcontroller. The control signal and the running time are then matched to this 100% stroke.	Press S2		
Direction of stroke	Direction of stroke relative to the control signal	S3.1	Symbol	
direct [1]	0% control signal corresponds to 0% position feedback. (The actuator spindle is retracted or extended according to the selected closing point.)	OFF	H Y	
inverted	0% control signal corresponds to 100% position feedback. (The actuator spindle is extended or retracted according to the selected closing point.)	ON	H Y	
Valve closing point	Closing point with actuator spindle retracted or extended.	S3.2	Symbol	Consequence
up [2]	The actuator spindle is retracted into the actuator and the valve stem is extended from the fitting. The position feedback indicates 0% if the stroke direction is «direct».	OFF	▲	Y1
down [3]	The actuator spindle is extended from the actuator and the valve stem is retracted into the fitting. The position feedback indicates 0% if the stroke direction is «direct».	ON	▼	Y1

[1] Factory setting
[2] Standard setting for valves H4..B, H5..B, H6..N, H6..R, H7..N and H7..R
[3] Standard setting for valves H6..S and H6..SP

LED display H1

The LED display is two-coloured (red/green) and shows the current status of the actuator.

Green steady light	Actuator working properly	
Green flashing light	Test run or adaptation with synchronisation in progress	
Red steady light	A fault is present	Possible causes of malfunctions: – Actuator installed incorrectly – Valve stem blocked – No valve installed The adaptation must be repeated by pressing pushbutton S2 after the malfunction has been eliminated.
Red flashing light	After every voltage interruption (>2 s). The valve is automatically synchronized at the selected closing point the next time it closes, and the LED indicator changes from a red flashing light to a green steady light.	
Alternating red/green flashing light	Addressing via the control system and operation of the adaptation pushbutton S2 in progress	

Functions *(continued)*

Modulating control

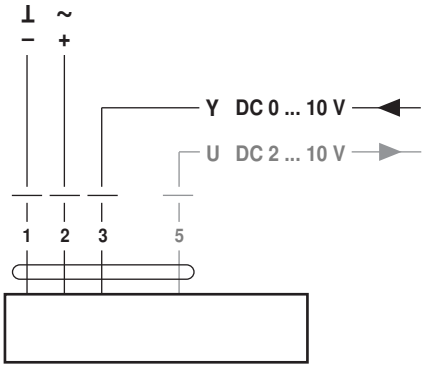

Symbols: Direction of stroke	Symbols: Closing point Valve	Signal direct	Signal inverted	Closing point up	Closing point down	Control signal min. (e.g. Y = 2 V)	Control signal max. (e.g. Y = 10 V)	Measuring signal min. (e.g. U = 2 V)	Measuring signal max. (e.g. U = 10 V)	Actuator spindle moves	
		S3.1		S3.2							
H Y	▲	OFF		OFF		X		X		ON	
							X		X		OFF
	▼	OFF			ON	X		X			OFF
							X		X	ON	
H Y	▲		ON 1)	OFF		X			X		OFF
							X	X		ON	
	▼		ON 1)		ON	X			X	ON	
							X	X			OFF

1) If the controller generates a negative signal (<0.15 V), slide switch S3.1 must not be set to «ON», if the operating range of the actuator is set to 2 … 10 V (Exception: start point in the parameterized operating range of 0.5 V).

3-point control

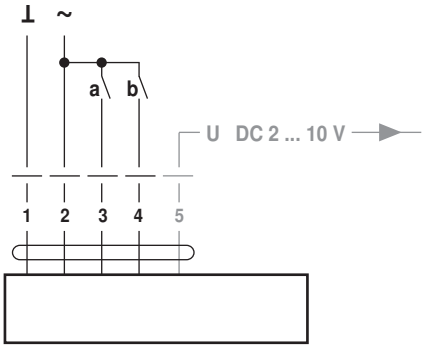

The linear actuator must be accordingly parameterized and equipped with a 3-wire connector for 4-point applications.

Symbols: Direction of stroke	Symbols: Closing point Valve	Signal direct	Signal inverted	Closing point up	Closing point down	Relay contact a (Y1)	Relay contact b (Y2)	Measuring signal min. (e.g. U = 2 V)	Measuring signal max. (e.g. U = 10 V)	Actuator spindle moves	
		S3.1		S3.2		0	0	1)	1)	stops	stops
H+ Y2 Y1 H-	▲	OFF		OFF		1	0		m 2)		OFF
						0	1	m 2)		ON	
	▼	OFF			ON	1	0		m 2)	ON	
						0	1	m 2)			OFF
H+ Y2 Y1 H-	▲		ON	OFF		1	0		m 2)	ON	
						0	1	m 2)			OFF
	▼		ON		ON	1	0		m 2)		OFF
						0	1	m 2)		ON	

1) Measuring signal U according to position
2) m = if relay contact a or b is in switch position 150 for longer than the running time (1 s)

Note
Only works with a nominal voltage of **AC 24 V**!

Override control 100%

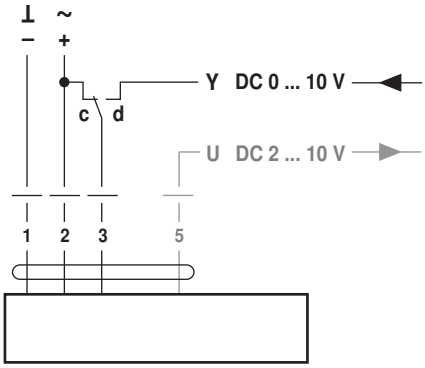

A typical use for 100% override control is in a frost protection circuit. Whether or not the frost thermostat has to interrupt the signal conductor to the controller «d» depends on the make of controller being used (not necessary, if the signal output at the controller is short circuit proof and protected against polarity reversal).

Symbols: Direction of stroke	Symbols: Closing point Valve	Signal direct	Signal inverted	Closing point up	Closing point down	Control signal min. (e.g. Y = 2 V)	Control signal max. (e.g. Y = 10 V)	Measuring signal min. (e.g. U = 2 V)	Measuring signal max. (e.g. U = 10 V)	Actuator spindle moves	
		S3.1		S3.2							
H Y	▲	OFF		OFF		1	0		X		OFF
			ON			1	0	X		ON	
	▼	OFF			ON	1	0		X	ON	
			ON			1	0	X			OFF

Dimensions [mm]

Dimensional drawings

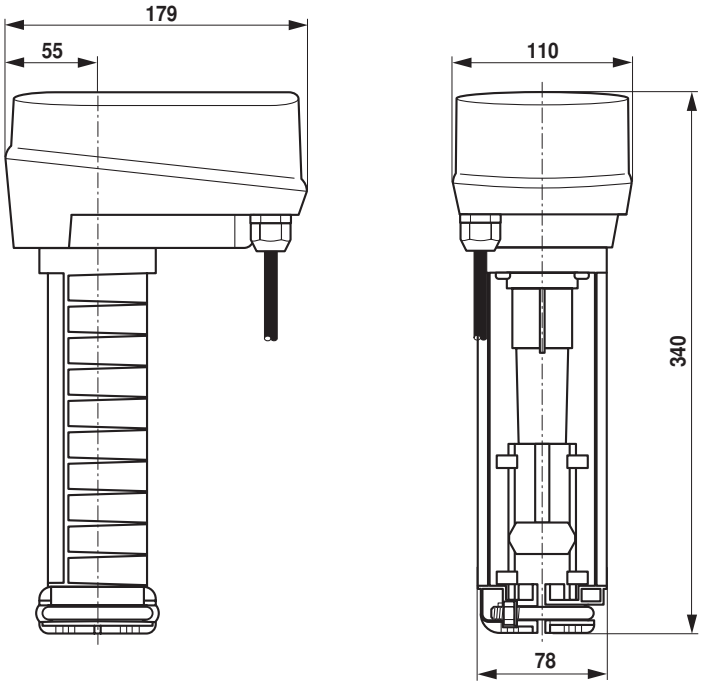

Further documentations

- Complete overview «The complete range of water solutions»
- Data sheets for globe valves
- Installation instructions for actuators resp. globe valves
- Notes for project planning (hydraulic characteristic curves and circuits, installation regulations, commissioning, maintenance etc.)

BELIMO

AV(Y)24-MFT(2)(-R)
AV24-MFT2(-R)-C105
AV(Y)24LON

70772-00001.D

CE

AV(Y)24-MFT(2)(-R)

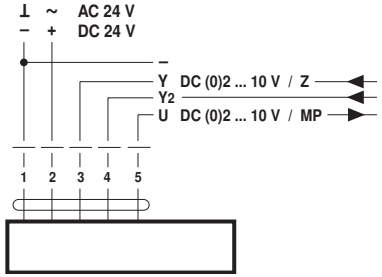

AV24-MFT2(-R)-C105

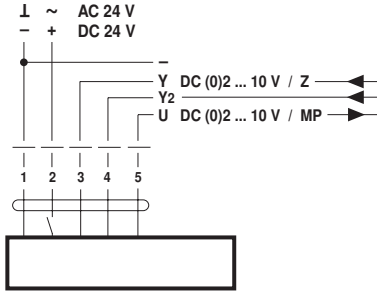

AV(Y)24LON

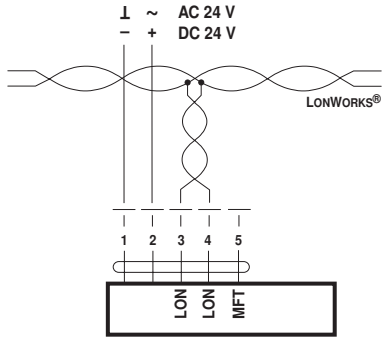

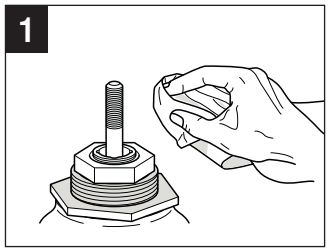

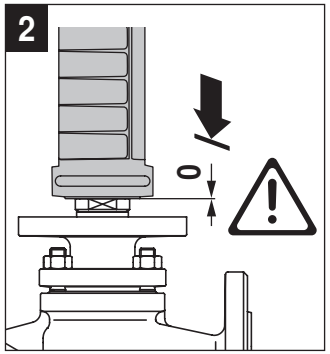
0

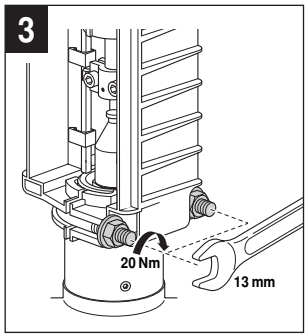
20 Nm
13 mm

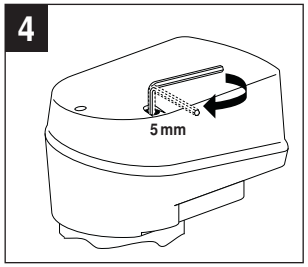
5 mm

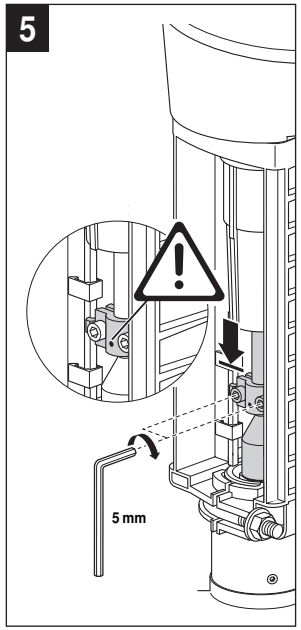
5 mm

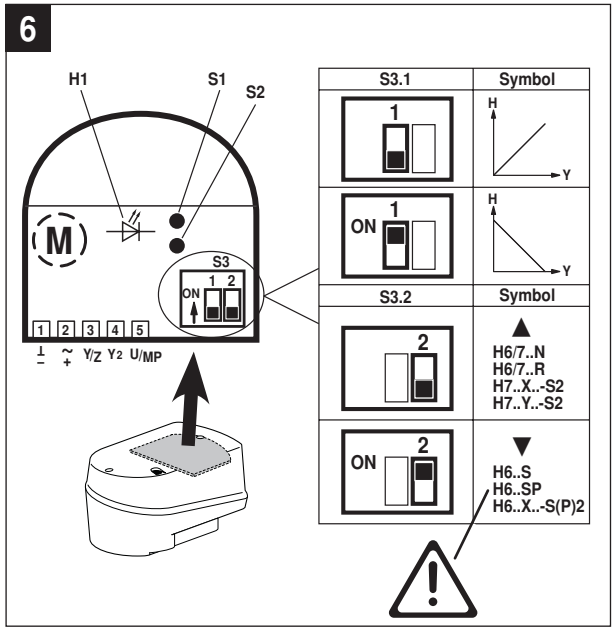
H1
S1
S2
M
S3
ON
1 2
1 2 3 4 5
Y/Z Y2 U/MP
S3.1
Symbol
1
ON 1
H
Y
S3.2
Symbol
2
ON 2
H6/7..N
H6/7..R
H7..X..-S2
H7..Y..-S2
H6..S
H6..SP
H6..X..-S(P)2

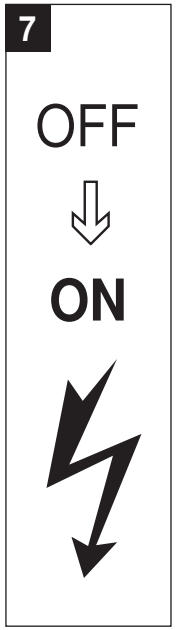
OFF
ON

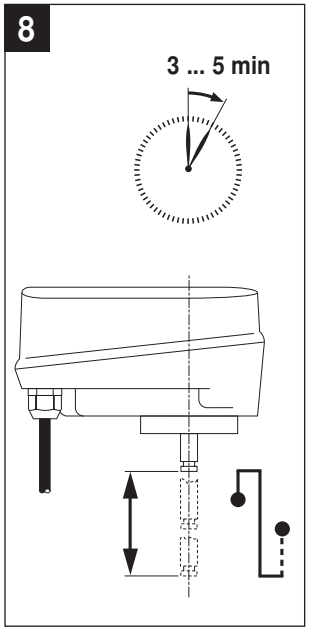
3 ... 5 min

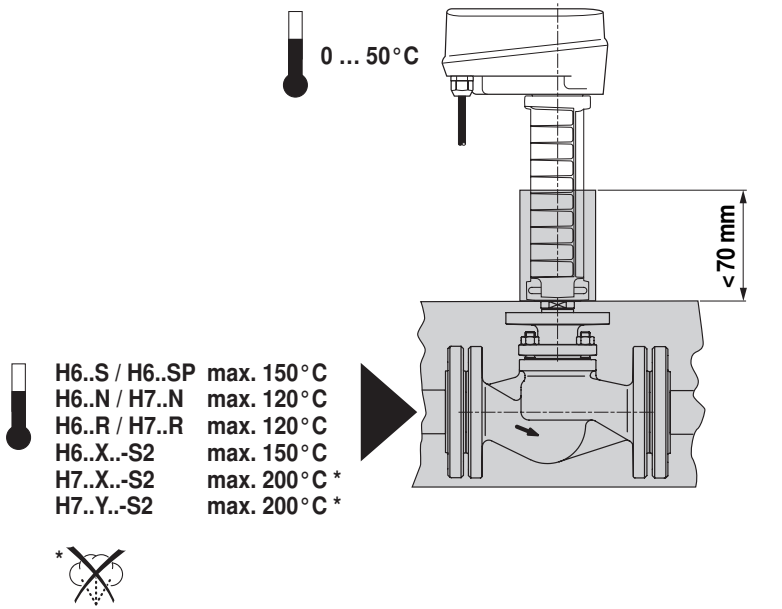
0 ... 50°C
<70 mm
H6..S / H6..SP max. 150°C
H6..N / H7..N max. 120°C
H6..R / H7..R max. 120°C
H6..X..-S2 max. 150°C
H7..X..-S2 max. 200°C *
H7..Y..-S2 max. 200°C *
*

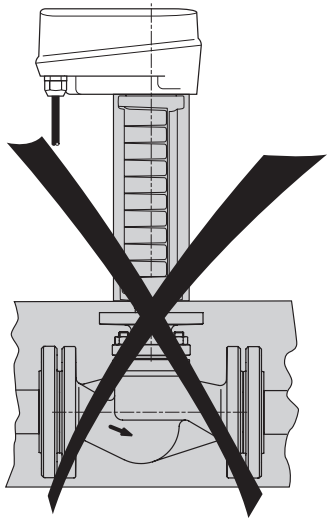

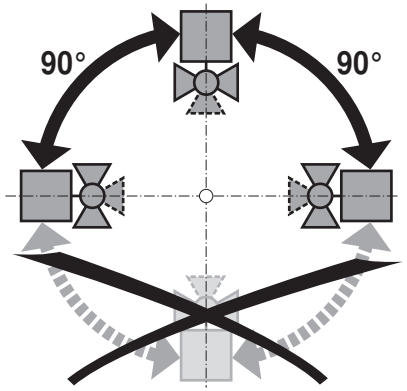
90°
90°